SUPPORT TYPE OF ROCK CLASS I
1:100

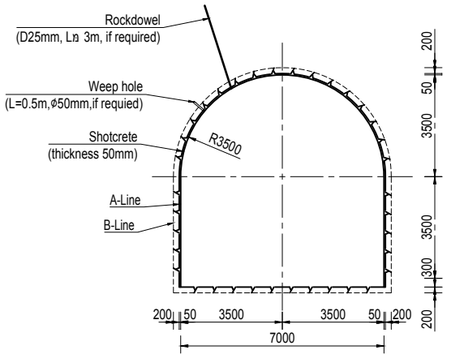

SUPPORT TYPE OF ROCK CLASS II
1:100

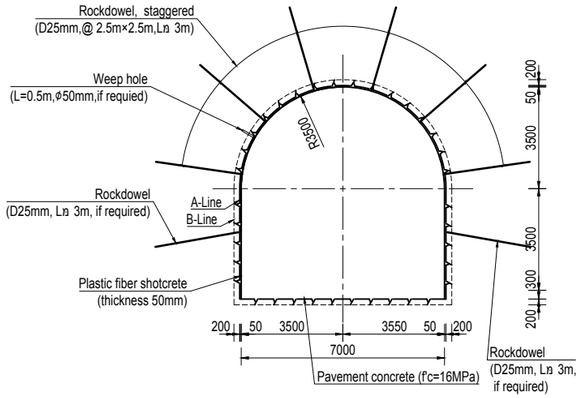

SUPPORT TYPE OF ROCK CLASS III
1:100

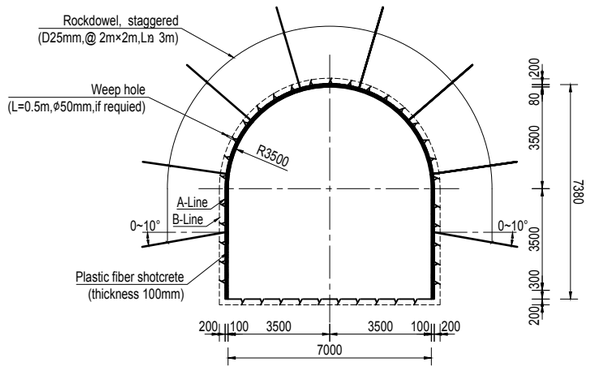

SUPPORT TYPE OF ROCK CLASS IV
(WITHOUT STEEL SUPPORT) 1:100

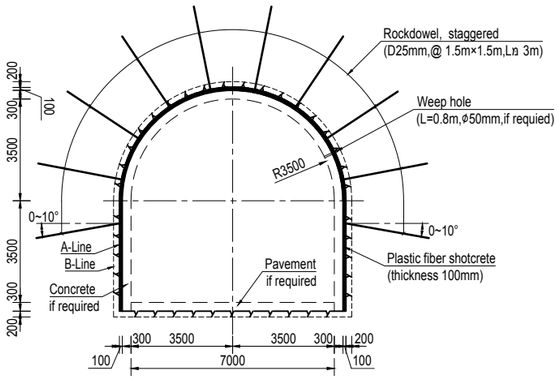

SUPPORT TYPE OF ROCK CLASS IV
(WITH STEEL SUPPORT) 1:100

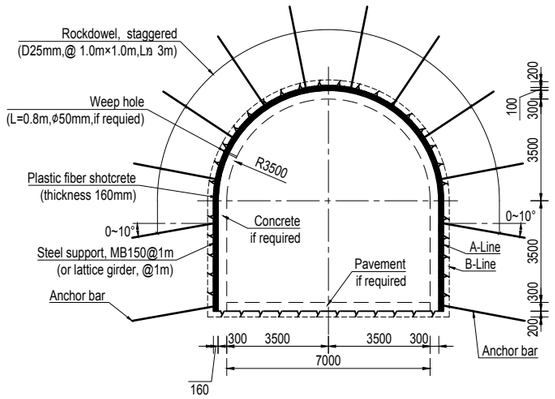

DETAIL OF PAVEMENT CONCRETE
1:10

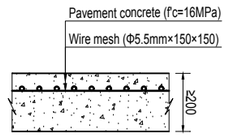

Scale 1:100 0 1 2 3 4 5m

Scale 1:10 0 0.1 0.2 0.3 0.4 0.5m

NOTE

1. All dimensions are in millimeters, and coordinates, chainages & elevations are in meters.
2. The excavation and support methods can be adjusted according to the actual situation after the geological conditions are revealed.
3. It is evident that the maximum unsupported span is a guideline, only, and needs continuous adjustment to the prevailing rock conditions and construction requirements at the spot.
4. The cylinder specified compressive strength of tunnel shotcrete and cement mortar at 28 days of age is 25MPa.
5. The specified compressive strength of concrete is the cylinder strength at age of 28 days.
6. The yield strength and of steel is 250MPa.
7. Rust preventive compound will be sprayed on exposed surface of steel structure.
8. Symbol description:
   A-Line is the design excavation line.
   B-Line is the overbreak line.
   R denotes round bar, yield strength of the round bar is 280MPa.
   D denotes deformed bar, yield strength of the deformed bar is 500MPa;
9. The forepoling is mainly used in the tunnel section with poor surrounding rock geology, which should be used together with dowel and steel support or lattice girder , and the spacing of dowel should be consistent with that of steel support.
10. The detail of weep holes, rock dowel, steel support and steel lattice girder see the drawing No. UT1-C-000-CVL-DG-40001.
11. The end position of the access tunnel may be adjusted according to the final design of the powerhouse.
12. The steel support or lattice girder to rock class V / IV is subjected to the exposed geological condition.

REFERENCE DRAWINGS

UT1-C-000-CVL-DG-40001	Detailed Design Drawing of Excavation and Support for Underground Cavern
UT1-C-060-CVL-DG-43001	Layout Drawing of Work Adit for Steel Penstock Tunnel
UT1-C-090-CVL-DG-64001	Layout of Access Tunnel to Powerhouse

SYMBOL AND LEGEND

FOR APPROVAL

THIS DRAWING AND THE INFORMATION CONTAINED HEREIN ARE PRELIMINARY FOR APPROVAL.
IT CAN BE CHANGED IN THE EXECUTION STAGE
THIS DRAWING IS THE PROPERTY OF DOOSAN HEAVY INDUSTRIES & CONSTRUCTION CO., LTD.
IT IS NOT TO BE COPIED OR USED IN ANY WAY DETRIMENTAL TO THE COMPANY.

REV. NO.	DATE	DESCRIPTION	DRAWN	CHKD.	APPD.
0A	15.JUN.2022	First issue	Han Y.H.	Lei Y.G.	Luo L. Zhou L.S.

PROJECT TITLE

Upper Trishuli-1 HEP (216MW)

OWNER

NWEDC NEPAL WATER AND ENERGY DEVELOPMENT CO. PVT. LTD.

OWNER'S ENGINEER

TRACTEBEL engie jade CONSULT

CONTRACTOR

DOOSAN Enerbility

DRAWING TITLE

Excavation and Support Drawing of Work Adit for Steel Penstock Tunnel

INDEX	DRAWING NUMBER	SHEET NO.	REV. NO.
A	UT1-C-060-CVL-DG-43002- 01	1 OF 3	0A

A1 (594 x 841 MM)